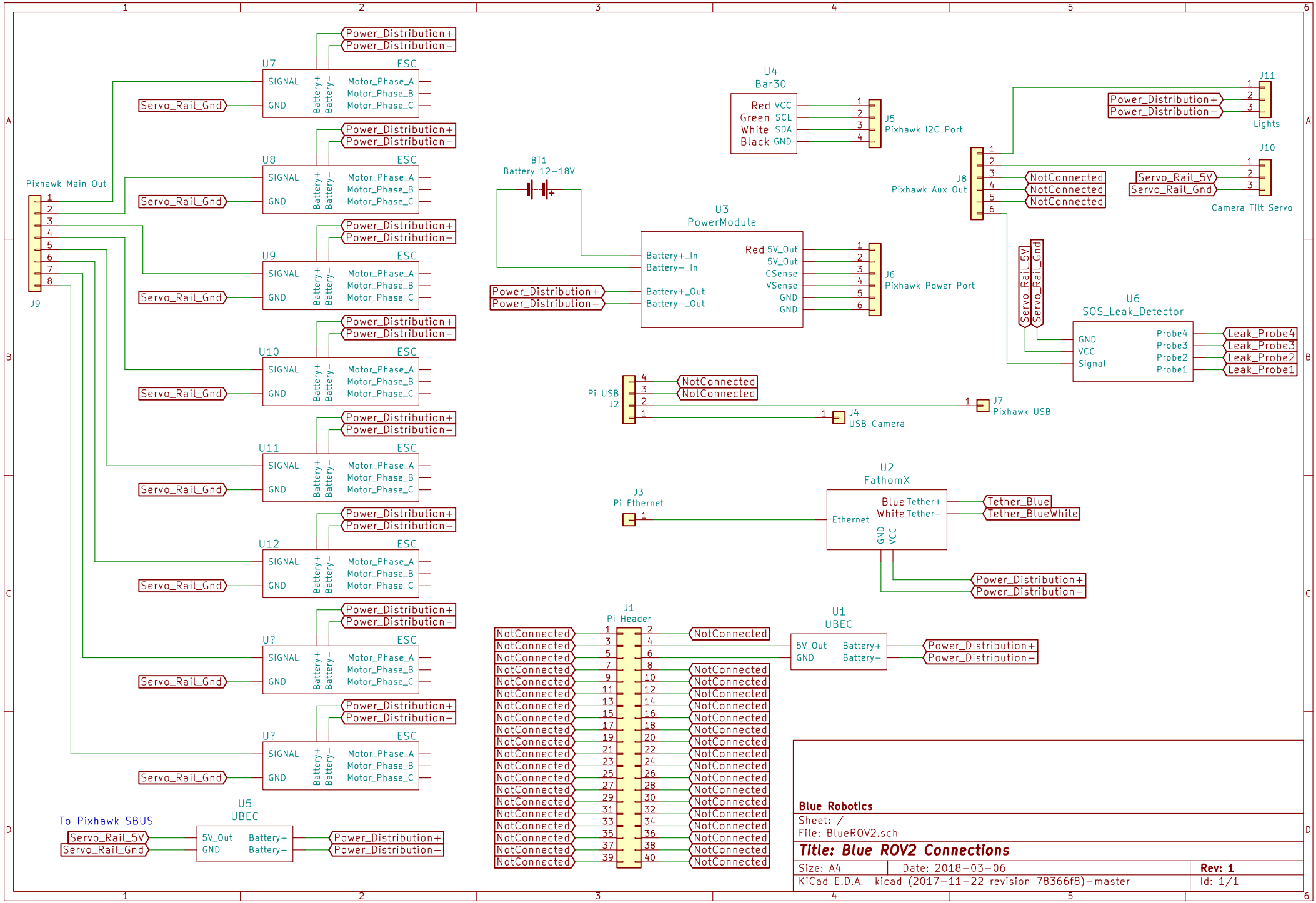
Pixhawk Main Out
J9
U7
U8
U9
U10
U11
U12
U?
U?
ESC
SIGNAL
GND
Battery+
Battery−
Motor_Phase_A
Motor_Phase_B
Motor_Phase_C
Power_Distribution+
Power_Distribution−
Servo_Rail_Gnd
U5
UBEC
To Pixhawk SBUS
Servo_Rail_5V
Servo_Rail_Gnd
5V_Out
GND
Battery+
Battery−
BT1
Battery 12−18V
U3
PowerModule
Battery+_In
Battery−_In
Battery+_Out
Battery−_Out
Red 5V_Out
5V_Out
CSense
VSense
GND
GND
J6
Pixhawk Power Port
U4
Bar30
Red VCC
Green SCL
White SDA
Black GND
J5
Pixhawk I2C Port
J8
Pixhawk Aux Out
NotConnected
J11
Lights
J10
Camera Tilt Servo
U6
SOS_Leak_Detector
GND
VCC
Signal
Probe4
Probe3
Probe2
Probe1
Leak_Probe4
Leak_Probe3
Leak_Probe2
Leak_Probe1
Pi USB
J2
J4
USB Camera
J7
Pixhawk USB
J3
Pi Ethernet
U2
FathomX
Ethernet
Blue Tether+
White Tether−
GND
VCC
Tether_Blue
Tether_BlueWhite
J1
Pi Header
U1
UBEC
5V_Out
GND
Battery+
Battery−
Blue Robotics
Sheet: /
File: BlueROV2.sch
Title: Blue ROV2 Connections
Size: A4
Date: 2018−03−06
Rev: 1
KiCad E.D.A. kicad (2017−11−22 revision 78366f8)−master
Id: 1/1