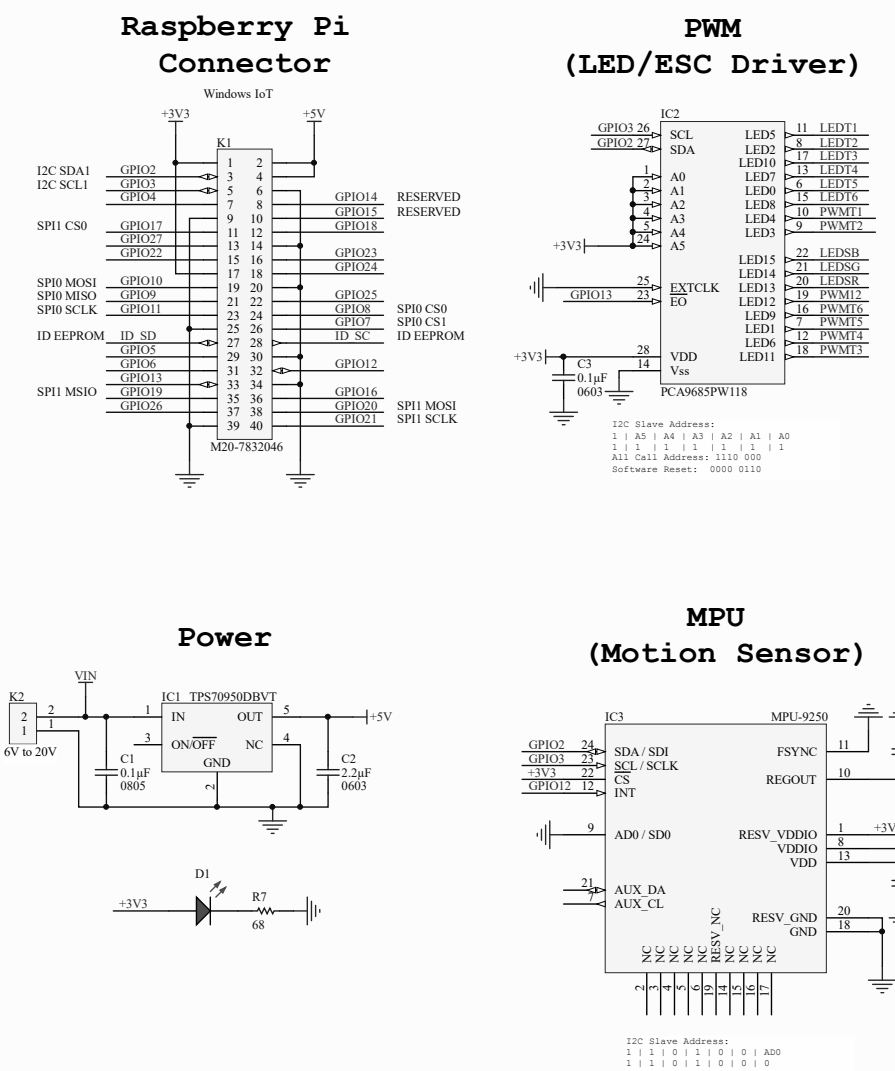
Raspberry Pi Connector
Windows IoT
K1
M20-7832046
I2C SDA1
I2C SCL1
SPI1 CS0
SPI0 MOSI
SPI0 MISO
SPI0 SCLK
ID EEPROM
SPI1 MSIO
RESERVED
SPI0 CS0
SPI0 CS1
ID EEPROM
SPI1 MOSI
SPI1 SCLK
PWM (LED/ESC Driver)
IC2
PCA9685PW118
I2C Slave Address:
1 | A5 | A4 | A3 | A2 | A1 | A0
1 | 1 | 1 | 1 | 1 | 1 | 1
All Call Address: 1110 000
Software Reset: 0000 0110
Thurster Terminal Blocks
K3
K4
K5
K6
K7
K8
External T100/T200 Thurster Control:
BlueESC
I2C Slave Address:
0 | 0 | 1 | 0| 1| 0| 0 0x29 (default) - 0x38
Pressure Sensor Terminal Block
External Sensor:
MS5837-30BA
I2C Slave Address:
1 | 1 | 1 | 0 | 1 | 1 | 0
Thurster LEDs
Power
K2
6V to 20V
IC1 TPS70950DBVT
MPU (Motion Sensor)
IC3
MPU-9250
I2C Slave Address:
1 | 1 | 0 | 1 | 0 | 0 | AD0
1 | 1 | 0 | 1 | 0 | 0 | 0
ID EEPROM
IC4
CAT24C32WI-GT3
I2C Slave Address:
1 | 0 | 1 | 0 | A2 | A1 | A0
1 | 0 | 1 | 0 | 0 | 0 | 0
Status LED
Title
Raspberry Pi - BlueRobotics BlueECS Thruster Controller
Size
B
Number
Untested Prototype
Revision
1.0
Date: 9/21/2015
Sheet of
File: RPi-HAT-BlueROV.SchDoc
Drawn By:

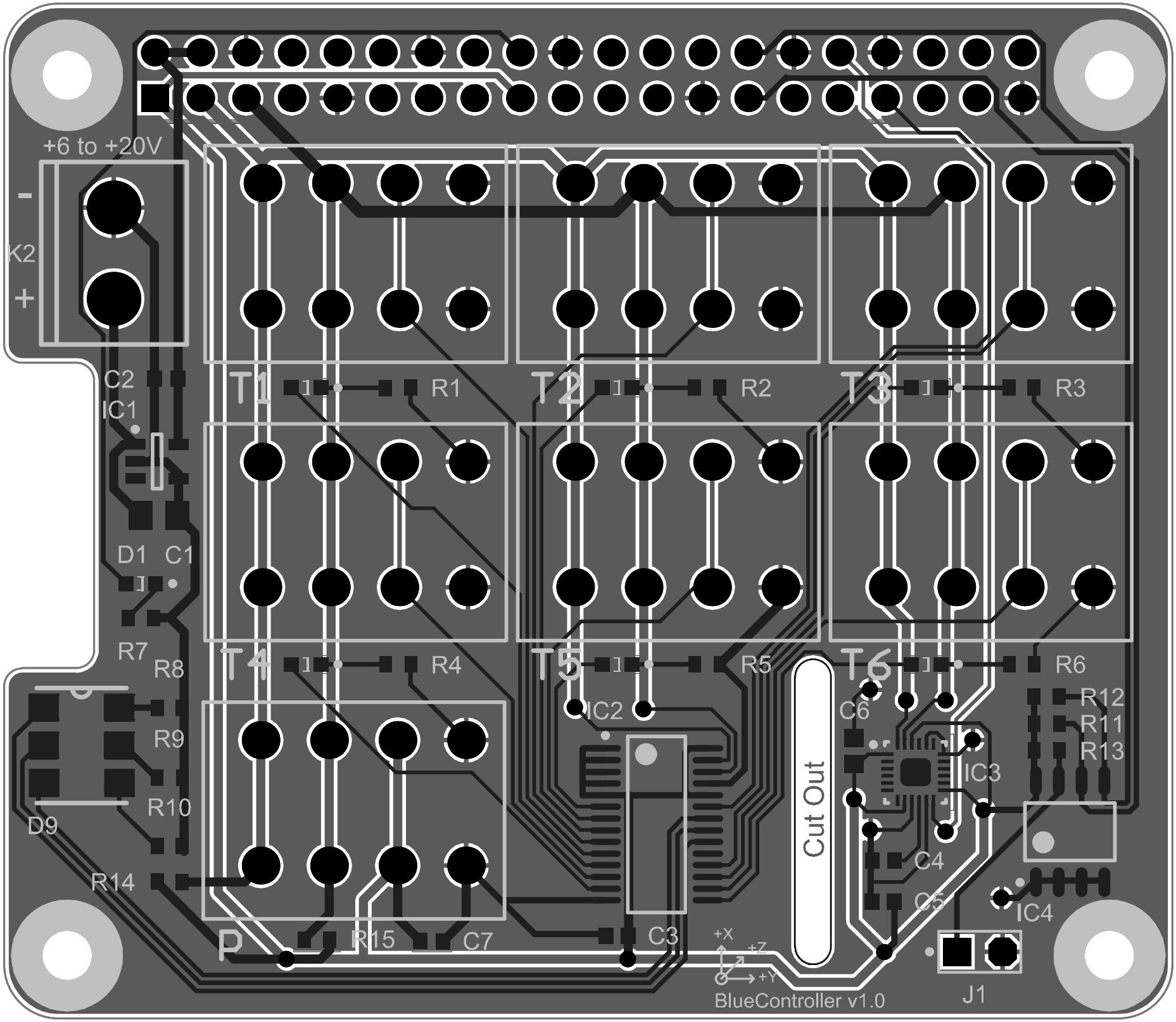
+6 to +20V
-
K2
+
C2
IC1
D1
C1
R7
R8
R9
R10
D9
R14
T1
R1
T2
R2
T3
R3
T4
R4
T5
R5
T6
R6
P
R15
C7
IC2
C3
Cut Out
C6
IC3
R12
R11
R13
C4
C5
IC4
J1
+X
+Z
+Y
BlueController v1.0

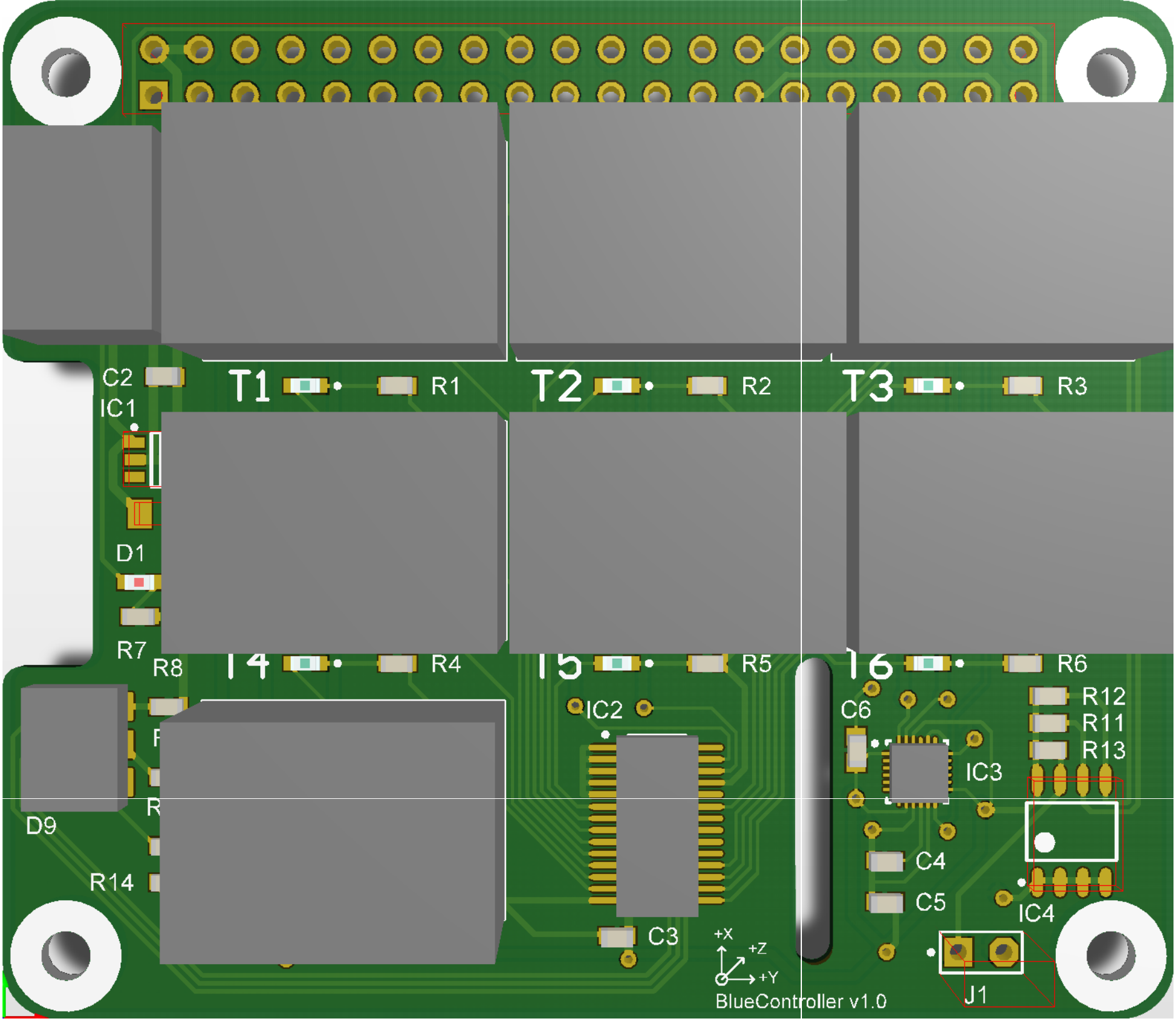
C2
IC1
T1
R1
T2
R2
T3
R3
D1
R7
R8
T4
R4
T5
R5
T6
R6
IC2
C6
R12
R11
R13
IC3
D9
R14
C4
C5
IC4
C3
+X
+Z
+Y
J1
BlueController v1.0